4 bit Arithmetic and Logic Shift Unit

By

Harshil Patel

TABLE OF CONTENTS

Sr.No.	Topic name		P.No.
1	What is ALU ?		**1**
	1.1	What is need of ALU ?	**1**
2	Components of ALU		**1**
	2.1	4-bit arithmetic unit	**1**
	2.2	4-bit logic unit	**2**
	2.3	4-bit combinational circuit shifter	**3**
3	LOGISIM implementation and operation		**4**
	3.1	Operations on ALU	**4**
4	Conclusion		**5**

LIST OF FIGURES

F.No.	Figure Name	P.No.
2.1	4-bit arithmetic unit	**2**
2.2	4-bit logic unit	**2**
2.3	4-bit Combinational Circuit Shifter	**3**
3.1	4 bit Arithmetic and Logic Shift Unit	**4**

LIST OF TABLES

Table No.	Table Name	Page No.
3.1	Operations on ALU	**4**

1. What is ALU ?

In computing, an **arithmetic logic unit** (**ALU**) is a combinational digital circuit that performs arithmetic and bitwise operations on integer binary numbers. This is in contrast to a floating-point unit (FPU), which operates on floating-point numbers. It is a fundamental building block of many types of computing circuits, including the central processing unit (CPU) of computers, FPUs, and graphics processing units (GPUs).

The inputs to an ALU are the data to be operated on, called operands, and a code indicating the operation to be performed; the ALU's output is the result of the performed operation. In many designs, the ALU also has status inputs or outputs, or both, which convey information about a previous operation or the current operation, respectively, between the ALU and external status registers.

1.1. What is need of ALU ?

Instead of having individual registers performing the micro operations directly, computer systems employ a number of storage registers connected to a common operational unit called an arithmetic logic unit, abbreviated ALU. To perform a microoperation, the contents of specified registers are placed in the inputs of the common ALU. The ALU performs an operation and the result of the operation is then transferred to a destination register. The arithmetic, logic, and shift circuits introduced in previous sections can be combined into one ALU with common selection variables.

2. Components of ALU

1. Arithmetic Unit (4-bit)
2. Logical Unit (4-bit)
3. Combinational Circuit Shifter (4-bit): right shift, left shift.

2.1. 4-bit Arithmetic Unit

There are basically two components used in the Arithmetic Unit.

1. 4 to 1 Multiplexer (MUX)
2. Full adder

There are four 4:1 MUX and four Full Adders in my circuit. this arithmetic unit can perform 7 operations, including add, subtract, transfer, etc.

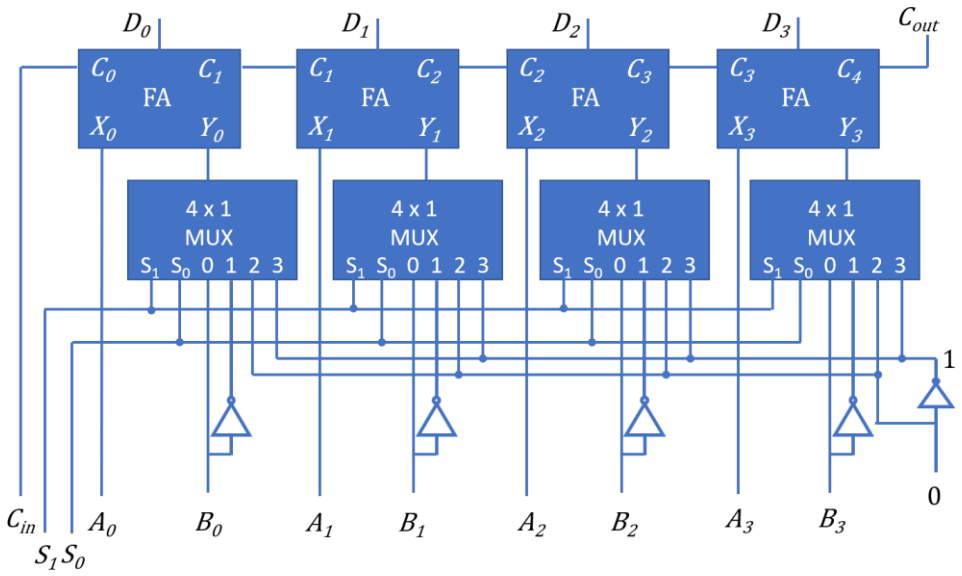

Figure 2.1. 4-bit Arithmetic Unit

2.2. 4-bit Logic Unit

There are four 4:1 MUX and 4 pairs of AND, OR, XOR, and NOT gates. In my circuit, we can perform the NOT operation on both inputs A and B. This Logic unit can perform 16 different logic operations that can be performed with two binary variables, including NAND, XOR, complement A, etc.

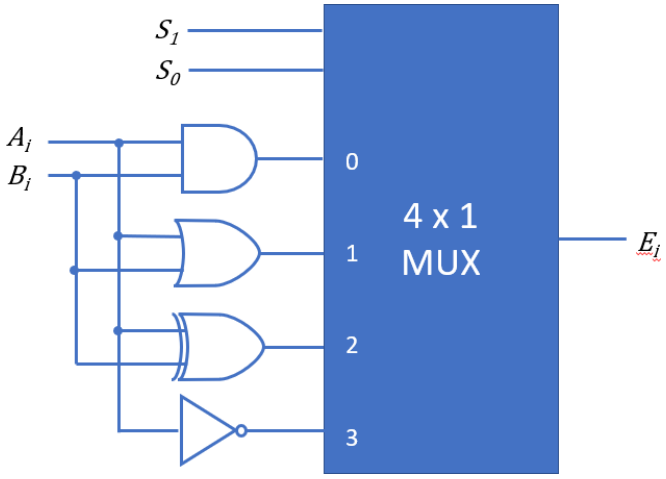

Figure 2.2. 4-bit Logic Unit

2.3. 4-bit Combinational Circuit Shifter

A combinational circuit shifter can be constructed with multiplexers. The 4-bit shifter has four data inputs and four data outputs. There are two serial inputs, one for shift left and the other for shift right. When the selection input is 0, the input data are shifted right. When 1, the input data are shifted left.

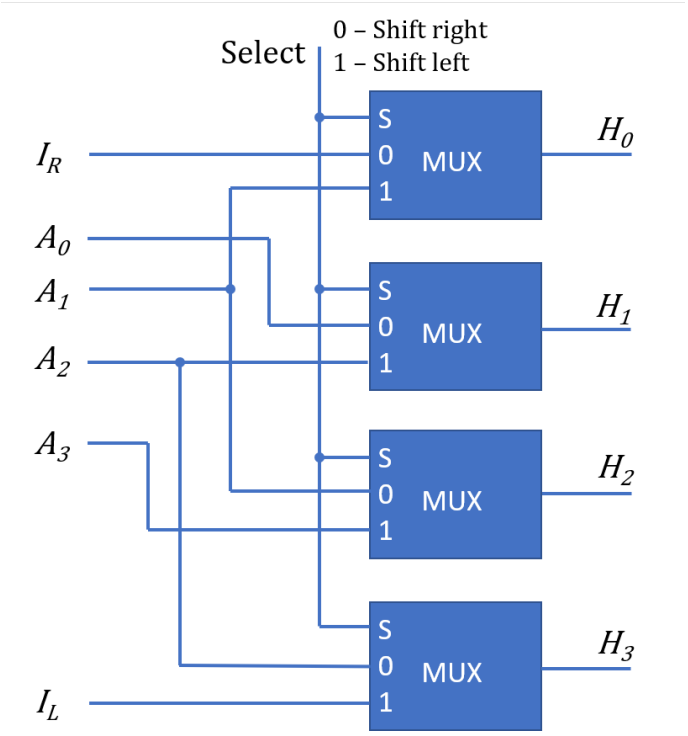

Figure 2.3. 4-bit Combinational Circuit Shifter

3. LOGISIM IMPLEMENTATION

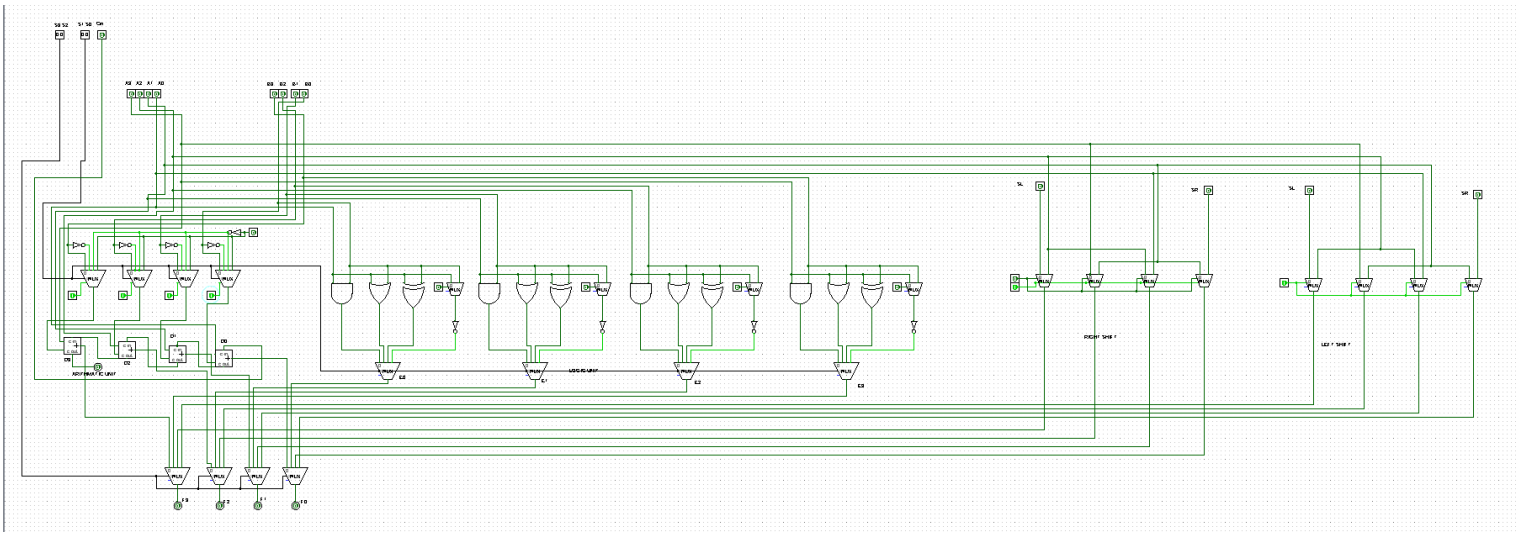

figure 3.1. 4 bit Arithmetic and Logic Shift Unit

3.1. Operations on ALU :

S_3	S_2	S_1	S_0	Cin	Operation	Function
0	0	0	0	0	F = A	Transfer A
0	0	0	0	1	F = A + 1	Increment A
0	0	0	1	0	F = A + B	Addition
0	0	0	1	1	F = A + B + 1	Add with carry
0	0	1	0	0	F = A + B’	Subtract with borrow
0	0	1	0	1	F = A + B’ + 1	Subtraction
0	0	1	1	0	F = A – 1	Decrement
0	0	1	1	1	F = A	Transfer A
0	1	0	0	x	F = A ∧ B	AND
0	1	0	1	x	F = A ∨ B	OR
0	1	1	0	x	F = A ⊕B	XOR
0	1	1	1	x	F = A’	Complement A
1	0	x	x	x	F = shr A	Shift right A into F
1	1	x	x	x	F = shl A	Shift left A into F

Table 3.1 Operations on ALU

4. Conclusion :

In conclusion, the design and implementation of the 4-bit Arithmetic Logic Shift Unit (ALU) presented in this project report offer a comprehensive understanding of fundamental computing components and their functionalities. The ALU serves as a critical element in computer architecture, performing arithmetic, logical, and shifting operations necessary for data processing.

Through the integration of an Arithmetic Unit, Logic Unit, and Combinational Circuit Shifter, the ALU achieves versatility in handling various operations efficiently. The combination of multiplexers, full adders, and logic gates enables the ALU to execute a wide range of tasks, including addition, subtraction, logical operations (AND, OR, XOR), as well as shifting data left and right.

By mapping out the control signals and operation codes, the ALU becomes capable of executing specific operations based on input configurations. This flexibility enhances its utility in diverse computing applications, contributing to the overall performance and functionality of computing systems.

Furthermore, the use of a structured approach in designing the ALU, along with clear diagrams and operation tables, facilitates comprehension and implementation. This project serves as a valuable resource for students and enthusiasts seeking to grasp the intricacies of digital circuit design and computational theory.

In summary, the 4-bit Arithmetic Logic Shift Unit represents a fundamental building block in computer architecture, embodying the principles of digital logic design and serving as a testament to the importance of efficient data processing in modern computing system